Kirloskar Pumps for Sugar Industry

Kirloskar

Enriching Lives

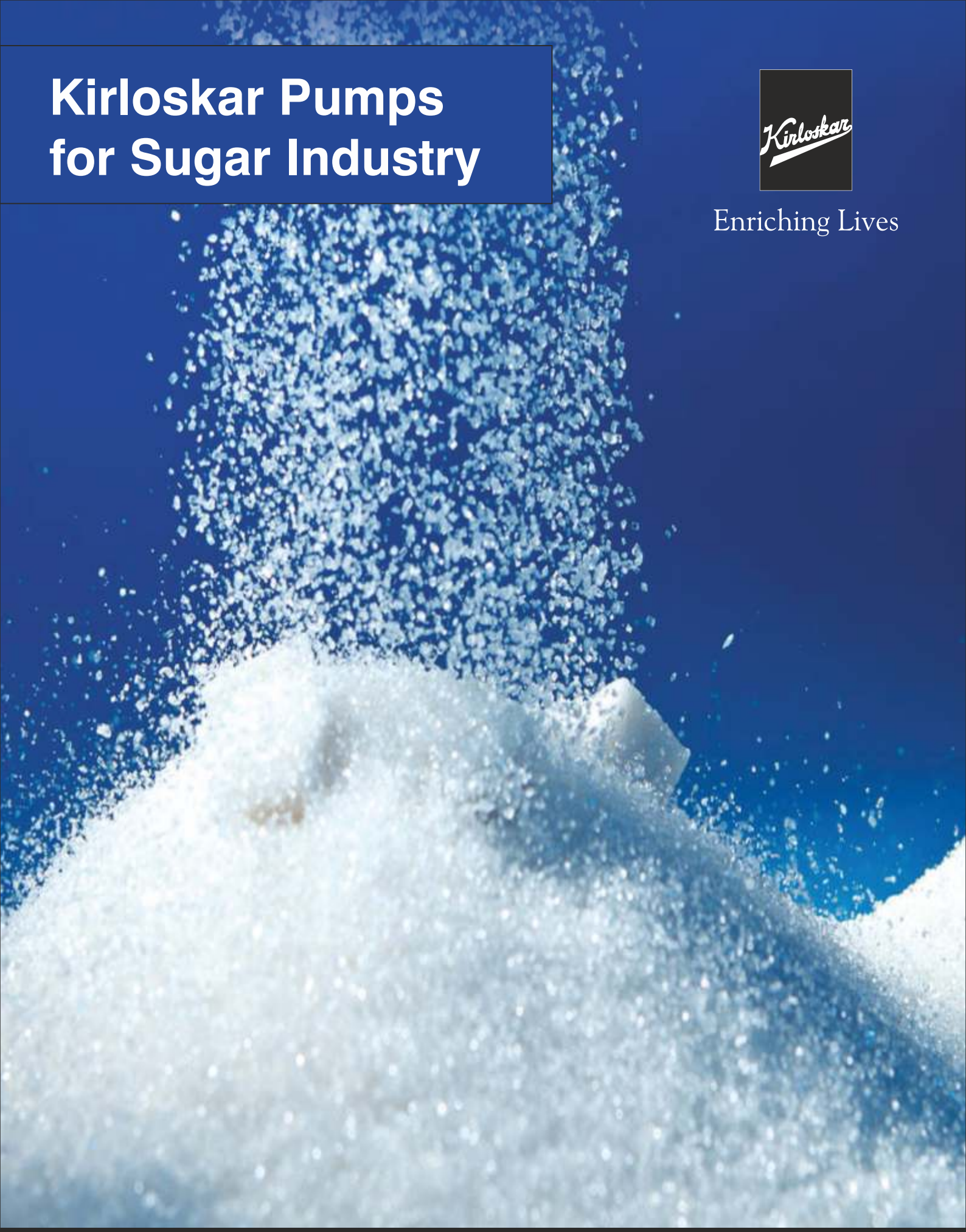

KIRLOSKAR BROTHERS LIMITED

A Kirloskar Group Company

Established 1888

Why Kirloskar?

- Optimised pumping solutions across market segments from concepts to commissioning
- Largest manufacturer and exporter of centrifugal pumps from India
- Provider of energy efficient pumping solutions to core sectors
- State-of-the art integrated manufacturing facilities
- Manufacturer of the largest pumps by size and horsepower in India
- Commands the highest market presence amongst pump manufacturers in India

Kirloskar Brothers Limited (KBL) is a world-class manufacturing company with expertise in engineering and manufacture of systems for fluid management.

Kirloskar Brothers Limited was established in 1888 and incorporated in 1920, KBL is the flagship company of the $ 2.1 billion Kirloskar Group. KBL, a market leader, provides complete fluid management solutions in the areas of water supply, building & construction, power plants, industry, irrigation, oil & gas and marine & defence. We engineer and manufacture industrial, agriculture and domestic pumps, valves and hydro turbines.

In 2003, KBL acquired SPP Pumps, United Kingdom and established SPP INC, Atlanta, USA, as a wholly owned subsidiary of SPP, UK, to expand its international presence. In 2007, Kirloskar Brothers International B.V., The Netherlands and Kirloskar Brothers (Thailand) Ltd., a wholly owned subsidiary in Thailand, were incorporated. In 2008, KBL incorporated Kirloskar Brothers Europe B.V. (Kirloskar Pompen B.V. since June 2014), a joint venture between Kirloskar International B.V. and Industrial Pump Group, The Netherlands. In 2010, KBL further consolidated its global position by acquiring Braybar Pumps, South Africa. SPP MENA was established in Egypt in 2012. In 2014, KBL acquired SyncroFlo Inc., the largest independent fabricator of commercial and municipal domestic water booster pumps.

To further strengthen its global position, in 2015, Kirloskar Pompen B.V. acquired Rodelta Pumps International, The Netherlands.

KBL has joint venture cooperation with Ebara, Japan since 1988 for the manufacture of API 610 standard pumps & multistage pumps. Kirloskar Corrocoat Private Limited is a joint venture between KBL and Corrocoat, UK since 2006. KBL acquired The Kolhapur Steel Limited in 2007 and Hematic Motors in 2010.

KBL has eight manufacturing facilities in India at Kirloskarvadi, Dewas, Kondhapuri, Shirwal, Sanand, Kaniyur, Kolhapur and Karad. In addition, KBL has global manufacturing and packaging facilities in Egypt, South Africa, Thailand, The Netherlands, United Arab Emirates, United Kingdom and United States of America. KBL has 12,700 channel partners in India and 80 overseas and is supported by best-in-class network of authorised service centres and authorised refurbishment centres across the country.

All the manufacturing facilities of KBL are certified for ISO 9001, ISO 14001, ISO 50001, BS OHSAS 18001 and SA8000. In addition, the Kirloskarvadi plant is also certified for N & NPT Stamp. KBL's corporate office in Pune is certified for ISO 9001 & SA8000.

The factories deploy total quality management tools using European Foundation for Quality Management (EFQM) model. The Kirloskarvadi plant of KBL is a state-of-the-art integrated manufacturing facility having Asia's largest hydraulic research centre with testing facility up to 5000 kW and 50,000 m3/hr.

KBL is the ninth pump manufacturing company in the world to be accredited with the N and NPT certification by American Society of Mechanical Engineers (ASME).

KBL in Sugar Industries

KBL is a world-class pump manufacturing company having expertise in fluid management solutions for various applications, right from Mill house, Boiling house to Distillery & Co-generation plants.

KBL has been supplying pumps for the sugar industry for the past 60 years. We supply to local sugar factories in India as well as outside India, mainly to the African continent.

Due to an in-house ferrous, non-ferrous & alloy steel foundry, there is no limitation for offering pumps in various materials of construction as per the process & customer requirement. This ensures quality & integrity of casting.

In India, we have a wide network of after sales service and spares through our own branch offices & dealer networks. For services outside India, we have international offices in various countries.

KBL also offers surface coating technology to pumps through their joint venture company - Kirloskar Corrocoat Pvt. Ltd. This enables customer to preserve the state of their assets as well as to reduce operating cost of running pumps by improving efficiency.

Our Strengths

- Comprises one of Asia's largest Hydraulic Research Centres with state-of-the-art testing facilities
- Manufacturer of large split case pumps
- Manufacturer of large vertical turbine pumps
- Manufacturer of concrete volute pumps
- Manufacturer of large size valves
- Sump model testing and actual scaled down model
- Executing large turnkey projects from concept to commissioning
- Service network – 24x7

Applications and Services

- Mill house
- Boiling house
- Distillery
- Co-Generation Plant
- Utility
- Effluent Treatment Plant
- Boiler Feed Pump in Co-Generation plant
- Fire-fighting Pumpset
- Energy Audit
- Lowest Life-cycle Cost (LLC)™ Pump
- Customer Service & Spares

Sugarcane Factory Flow Diagram

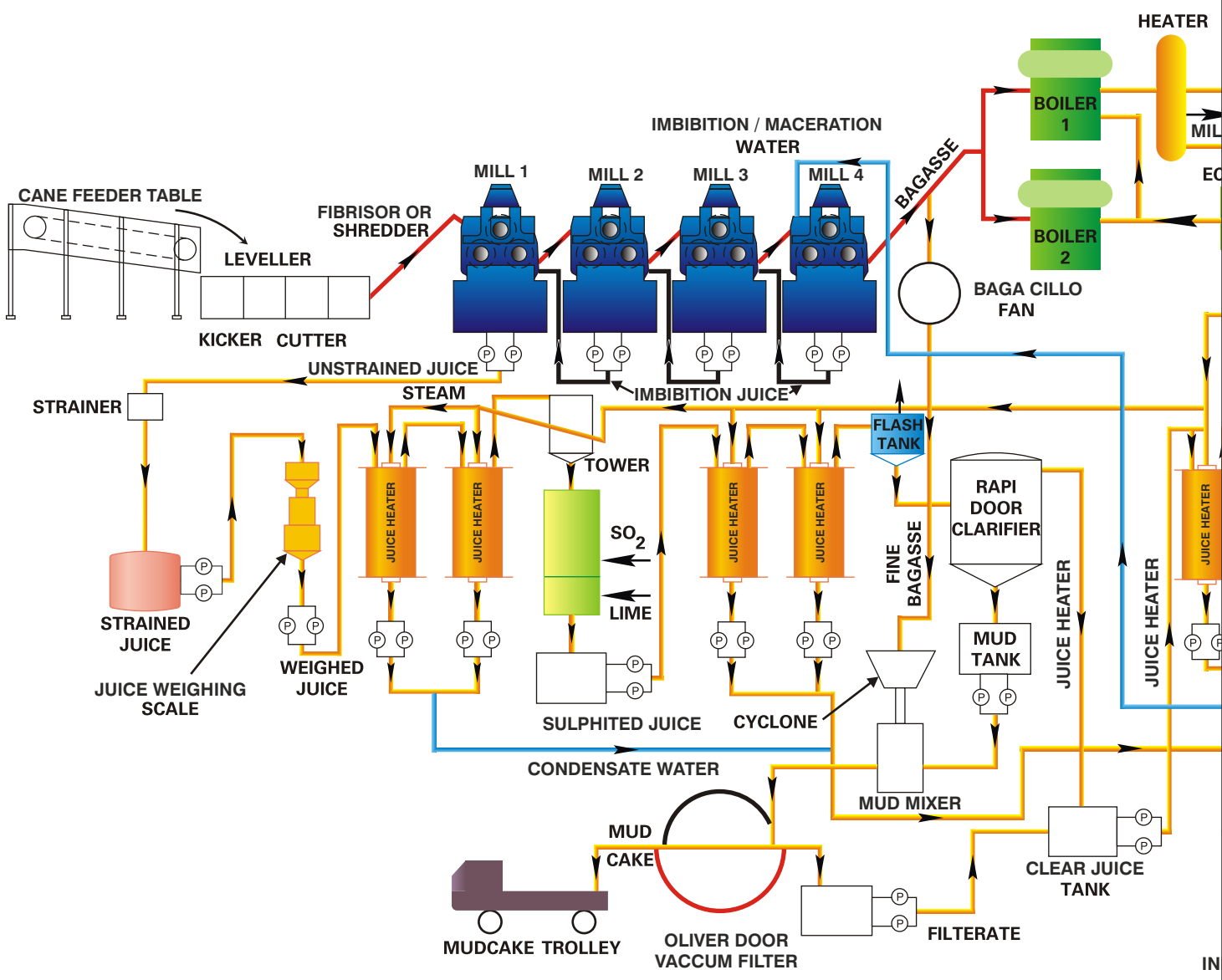

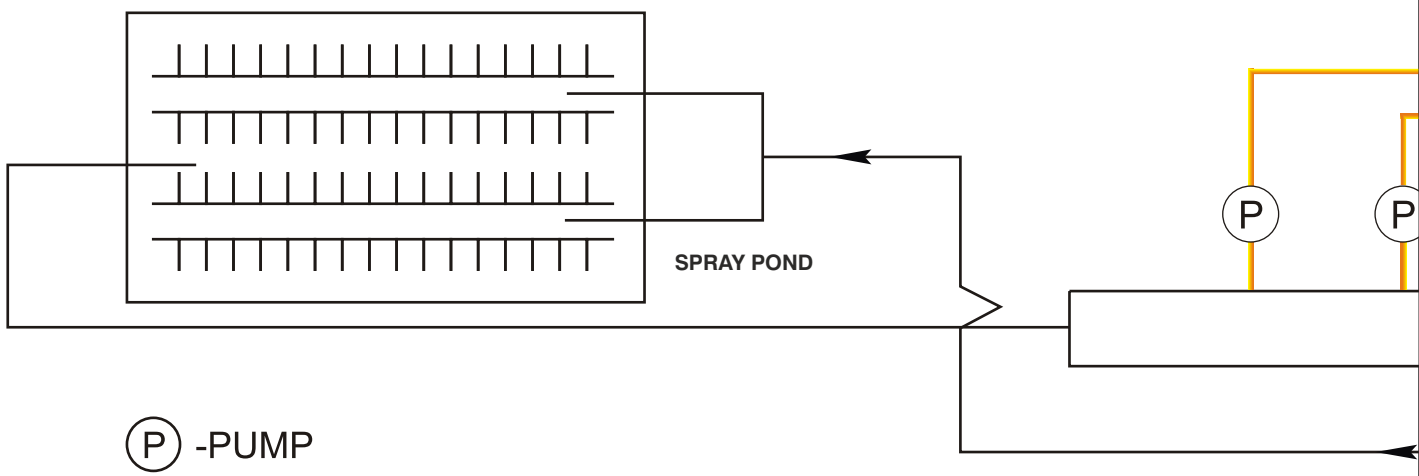

Sugarcane Factory Flow Diagram

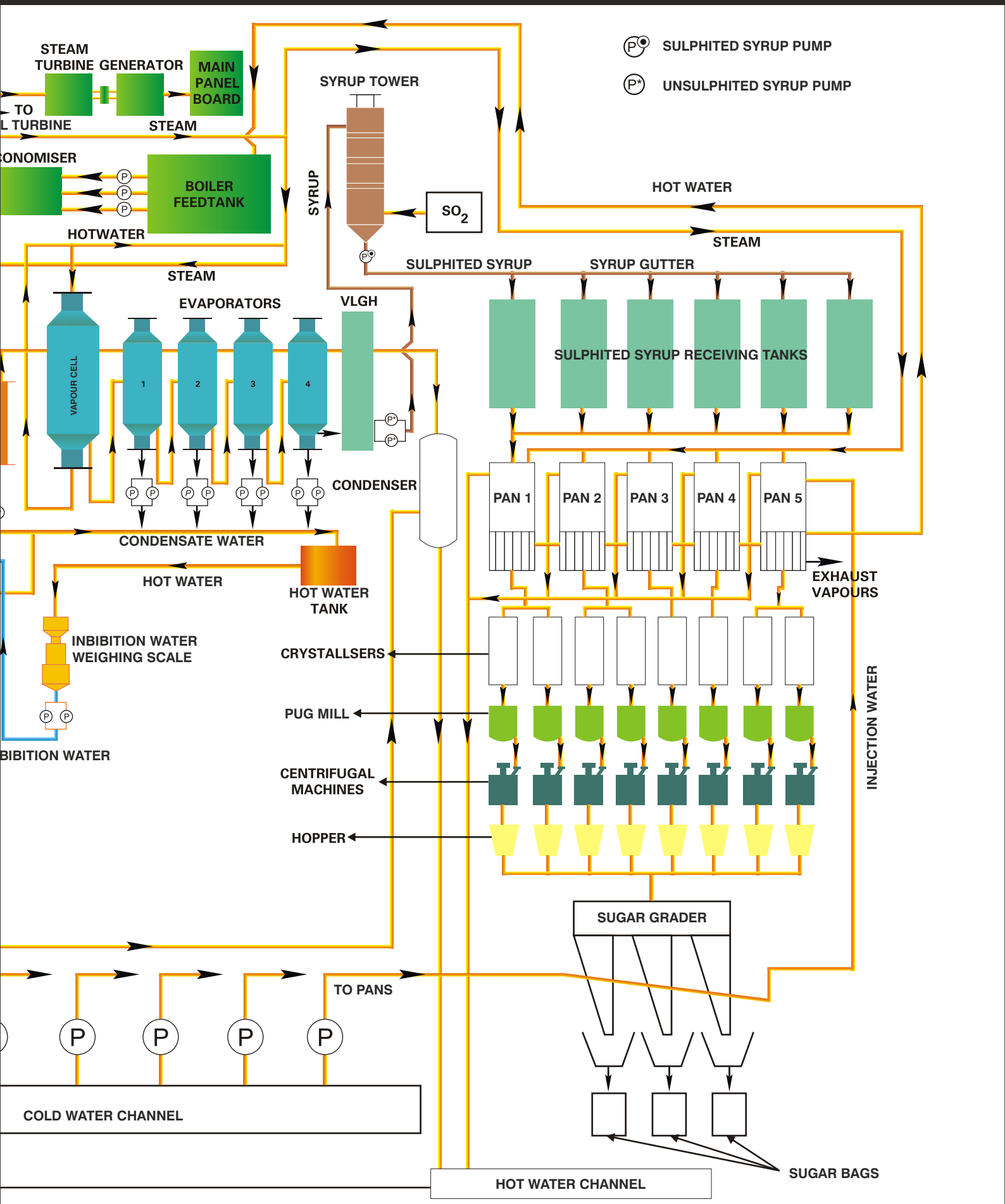

Applications of KBL pumps

	CAPACITY →	2500TCD	3500TCD	5000TCD	12000TCD	15000TCD
	SERVICE ↓	PUMP MODEL	PUMP MODEL	PUMP MODEL	PUMP MODEL	PUMP MODEL
Mill Units	IMBIBITION JUICE	SHM	SHM	SHM	SHM, NK	SHM, NK
	UNSCREENED JUICE	SHM	SHM	SHM, NK	SHL, NK	SHL, NK
	SCREENED JUICE	KPD	KPD	KPD	KPD	KPD
	MASCREATION WATER / IMBIBITION WATER	KPD	KPD	KPD	KPD	KPD
Clarifier	MUD RECIRCULATION	SHM	SHM	SHM	SHM	SHM
	MUD LIQUIDATING	SHM	SHM	SHM	SHM	SHM
	FILTRATE PUMP	SHM	SHM	SHM	SHM	SHM
	CLEAR JUICE	KPD	KPD	KPD	KPD	KPD
	FILTRATE PUMP	KPD	KPD	KPD	KPD	KPD
	CAKE WASH	KPD	KPD	KPD	KPD	KPD
Boiling House	WEIGHED JUICE	KPD	KPD	KPD	KPD	KPD
	JUICE HEATER COND.	KPD	KPD	KPD	KPD	KPD
	SULPHATED JUICE	KPD	KPD	KPD	KPD	KPD
	COND. FOR EVA	KPD/CE/IL	KPD/CE	KPD/CE	KPD/CE/IL	KPD/CE/IL
	COND. FOR EVA 1	KPD/CE/IL	KPD/CE/IL	KPD/CE/IL	KPD/CE/IL	KPD/CE/IL
	COND. FOR EVA 2 & 3	KPD/CE/IL	KPD/CE/IL	KPD/CE/IL	KPD/CE/IL	KPD/CE
	COND. FOR EVA 4	KPD/CE/IL	KPD/CE/IL	KPD/CE/IL	KPD/CE/IL	KPD/CE/IL
	SYRUP EXTRACTION	SHM	SHM	SHM	SHM	SHM
	PHOSPHATE SLURRY	KPD	KPD	KPD	KPD	KPD
	MILK OF LIME PUMP	KPDQF	KPDQF	KPDQF	KPDQF	KPDQF
	CAUSTIC SODA	KPD/SHM	KPD/SHM	KPD/SHM	KPD/SHM	KPD/SHM
	PAN CONDENSATE	KPD/CE	KPD/CE	KPD/CE	KPD/CE	KPD
	INJECTION PUMP	KPD/CE	KPD/CE	KPD/CE	KPD	KPD
	HOT & COLD WATER	KPD	KPD	KPD	DB/KPD	DB/KPD
Falling Film	INJECTION WATER	MF/ VT/UPE	MF/ VT/UPE	MF/ VT/UPE	MF/UPH/VT/UPE	MF/UPH/VT/UPE
	SYRUP PUMP	SHM	SHM	SHM	SHM	SHM
	SUGAR MELT	SHM	SHM	SHM	SHM	SHM
	SPRAY WATER	MF/DBL	MF/DBL	MF/DBL	MF/UPH	MF/UPH
	HOT WATER PRD	RKBF/CF/IL	RKBF/CF/IL	RKBF/CF/IL	RKBF/CF/IL	RKBF/CF/IL
Power House	RECIRCULATING JUICE	MF/KPD	MF/KPD	MF/KPD	MF/KPD	MF/KPD
	TRANSFER PUMP	KPD	KPD	KPD	KPD	KPD
	CONDENSATE PUMP	KPD	KPD	KPD	KPD	KPD
	STEAM DRIVEN PUMP	RKBF	RKBF	RKBF	RKBF	RKBF
	MOTOR DRIVEN PUMP	RKBF	RKBF	RKBF	RKBF	RKBF
	MAINLY COOLING WATER	MF/UPE	MF/UPE	MF/UPE	MF/UPE	MF/UPE
	AUXILIARY COOLING WATER	CpHm/ DB(L)/UP(E)	CpHm/ DB(L)/UP(E)	CpHm/ DB(L)/UP(E)	CpHm/ DB(L)/UP(E)	CpHm/ DB(L)/UP(E)
	MAKE UP WATER	CpHm/ DB	CpHm/ DB	CpHm/ DB	CpHm/ DB	CpHm/ DB
	D.M. WATER	CpHm	CpHm	CpHm	CpHm	CpHm
	CONDENSATE TRANSFER	KPD	KPD	KPD	KPD	KPD
	EFFLUENT TRANSFER	KPD(QF)	KPD(QF)	KPD(QF)	KPD(QF)	KPD(QF)

1. These selection is given as a general guidelines, pump capacity and head may vary depending on the site and accordingly pump model may change.

2. We have complete product range for distillery, co-generation, fire-fighting of utilities

3. We can supply pumps with corrosion resistant and energy saving glass flake coating of corrocoat

Product Range for Pumps

End Suction Pump - DB

Applications:

- Boiling House : Service Water
- Cogen : Make Up Water
- Distillery : Utility

Features

- Conforming to DIN 24255
- Back pull-out design
- Gland packed / Mechanical seal
- 50HZ/60HZ availability

Operating Range

Delivery size	32 mm to 150 mm
Capacity	Upto 550 m^3/hr
Head	Upto 100 metres
Temperature	(-) 10 °C to 100 °C

End Suction Process Pump - CPHM

Applications:

- Boiling House : Clear Juice, Kick Wash Water & Service Water
- Cogen : Make Up Water, ACW, Raw Water & DM Water

Features

- Conforming to DIN 24256/ISO 2858
- Back pull-out design
- Gland packed/ Mechanical seal
- 50HZ /60HZ availability

Operating Range

Delivery size	20 mm - 200 mm
Capacity	Upto 750 m^3/h
Head	Upto 150 metres
Temperature	(-) 30°C - 90°C

Product Range for Pumps

End Suction Process Pump KPD/KPDQF

EN 22858 (DIN 24256) and ISO 2858

Applications:

- Mill House : Strained Juice (Screened Juice), Imbibition Hot Water
- Boiling house : Clear Juice, Sulphited Juice, Milk of Lime, Condensate, Super Heated Wash Water, Kick Wash Water, Filtrate Juice & Caustic Soda
- Cogen: Exhaust Condensate (PRDS), Effluent Transfer
- Distillery: Fermentation, Evaporation & Distillation

End Suction Process Pump KPD

Features:

- Back pull out design
- Oil lubricated bearing
- Top centre line delivery

Operating Range

Delivery size	upto 350 mm
Capacity	upto 1550 m^3/hr
Head	upto 225 meters
Working pressure	16 - 25 bar
Temperature	(-) 50°C - 350°C

End Suction Process Pump KPDQF

Operating Range

Capacity	upto 580 m^3/hr
Head	upto 200 metres
Working pressure	16 - 25 bar
Temperature	(-) 50°C - (+) 350°C

Applications:

- Boiling house : Milk of Lime, Caustic Soda
- Cogen: Effluent Transfer

Features:

- Semi-open impeller
- Suitable for liquid with solid particles
- Stuffing box cooling (optional)
- Steam jacket (optional)

Material of Construction

- Cast iron, Cast steel, CA15, CF3, CF3M, CF8, CF8M, Alloy 20, CD4MCu, Hastalloy C, etc.

Product Range for Pumps

Process Pump - GK(P)

ISO 2858 / DIN EN 22858 / ISO 5199

Applications:

- Cogen : Make up water, Raw water
- Distillery : Fermentation, Evaporation, Distillation and Utility

Features

- End suction centrifugal process pump
- Back pull out design
- Top centerline discharge with foot mounted as well as centerline volute casing
- Availability of cooling jackets to cool stuffing box for liquids having temperature more than 105°C

Operating Range

Delivery size	Upto 150 mm
Capacity	upto 500 m^3/h
Head	upto 150 metres
Working pressure	16 - 25 bar
Temperature	Upto 180°C

Solid Handling Pump - SHM

IS 5600

Applications:

- Mill House : Unscreened Juice, Imbibition Juice
- Boiling House : Milk of Lime, Sulphited Syrup, Mud Recirculation & Sugar Melt

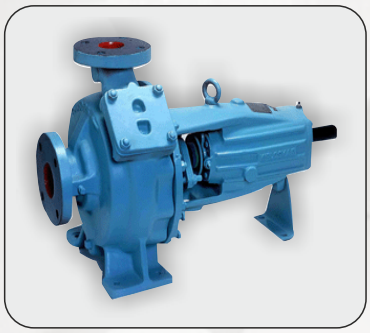

Features

- Back pull-out design
- Gland packed / mechanical seal
- Available in vertical execution

Operating Range

Delivery size	200 mm
Capacity	up to 800 m^3/hr
Head	up to 90 metres
Working pressure	16 bar
Temperature	(-) 10 °C to 140 °C

Product Range for Pumps

End Suction Solid Handling Non - Clog Pump - SHL

Applications:

- Mill House : Unscreened Juice

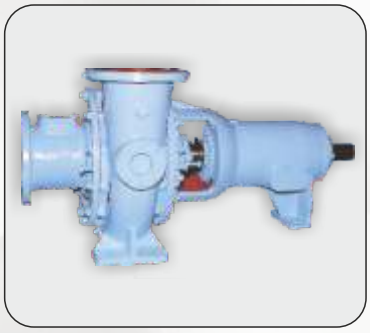

Features

- Horizontal Shaft, single stage, singe suction pumps with back pull-out type design
- 50HZ/60HZ availability

Operating Range

Delivery size	250 mm - 900 mm
Capacity	Upto 13000 m^3/h
Head	Upto 82 metres
Temperature	(-) 10°C - 90°C

End Suction Non - Clog Pump - NK

Applications:

- Mill House : Unscreened Juice

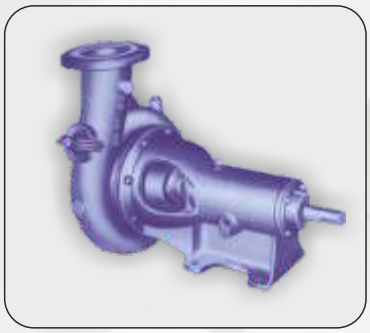

Features

- Single Stage, end suction, horizontal non- clog pumps
- Also available in vertical design

Operating Range

Delivery size	450 mm
Capacity	Upto 3400 m^3/hr
Head	Upto 55 metres
Temperature	(-) 10 °C to 140 °C

Product Range for Pumps

Mixed Flow Pump - MF

Applications:

- Boiling House : Injection Water & Spray Water
- Cogen : Main Cooling Water

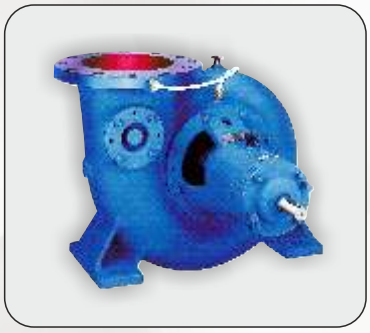

Features

- Pump casing: Horizontal/Vertical end suction high efficiency volute type with top/side/45 degrees orientations. Delivery flange and supporting feet are cast integral with the casing.
- Impeller: Non clog - Semi open / enclosed type are balanced dynamically
- Bearing: Deep groove ball bearing and thrust bearing. Standard lubrication - oil (except MF 200 pump with grease lubrication)

Operating Range

Delivery size	650 mm
Capacity	upto 7000 m^3/hr.
Head	upto 30 metres
Working pressure	16 bar
Temperature	(-) 10°C - 140°C

Horizontal Axially Split Casing Single Stage Pump - UP

i) UP - E

Applications:

- Boling House : Injection Water & Spray Water
- Cogen : Main Cooling Water

ii) UP - M

Applications:

- Cogen : Auxillary Cooling Water

Features:

- Gland packed/Mechanical seal
- 50HZ/60HZ availability
- Good suction performance
- Vibration free performance

Operating Range

Delivery size	50 mm to 1100 mm
Capacity	Upto 20000 m^3/hr
Head	Upto 160 metres
Temperature	(-) 10 °C - 90 °C

Product Range for Pumps

Condensate Extraction Pump - RKBCV

Applications:

- Cogen : Condensate

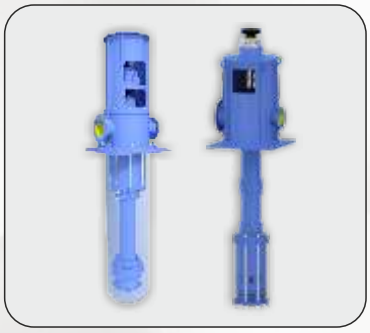

Features

- Vertical can (barrel) - type ring-section pump.
- Suction / stage impellers are of radial flow type design.
- Pump can be single or multistage
- Pump can either be with single or with double suction to have lower NPSHR

Operating Range

Delivery size	500 mm
Capacity	upto 2200 m^3/hr.
Head	upto 350 metres
Temperature	upto 120°C

Boiler Feed Pump - MSS / MSSH

KOPL

Applications:

- Cogen : Boiler Feed Water

Features:

- Design and manufacture as per company standard
- Multistage pump with ring section diffuser casing design, with foot mounted casing suitable for low pressure requirements
- Easy inspection and repair maintenance of bearings and mechanical seal after removal of coupling spacer only

Operating Range

Capacity	Up to 270 m^3/hr – MSS Up to 550 m^3/hr – MSSH
Head	Up to 550 m – MSS Up to 850 m - MSSH
Working pressure	Up to 11 bar
Temperature	(-) 50 - 165°C
Nozzle orientation	Top/Top & Side-Top
Flange rating	Cl. 150/600

Product Range for Pumps

Boiler Feed Pump - SS/SSD

KOPL

Applications:

- Cogen : Boiler Feed Water

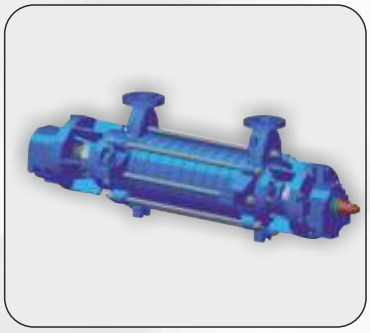

Features

- Design and manufacture as per company standard, however, can meet API 610 requirements.
- Multistage pump with ring section diffuser casing design with centerline support to meet high temperature and high pressure application especially in BFW application.
- First stage impeller with double suction is provided in SSD models to improvise NPSHR performance.

Operating Range

Capacity	Up to 650 m^3/hr
Head	Up to 2500 m
Working pressure	Up to 17 bar
Temperature	(-) 50 - 200°C
Nozzle orientation	Top-Top & Side-Top
Flange rating	Cl. 300/600/ 900/1500/2500

Boiler Feed Pump - DCS/DCD

KOPL

Applications:

- High pressure fluid handling in oil refineries and petrochemical industry
- MP and HP boiler feeed applications
- Light hydrocarbon and liquid gas transfer applications
- Sea water injection application in oil wells
- Mine dewatering
- Petroleum product pipeline booster apllications
- Pump as hydraulic power recovery turbine in chemical and process plants

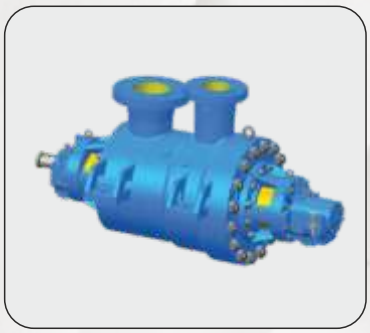

Features

- Design and manufacture as per API 610
- Multistage centerline supported heavy duty double casing diffuser design for handling high pressure and high temperature applications
- Easy inspection and repair maintenance of bearings and mechanical seal after removal of coupling spacer only. The cartridge (assembly of all parts except outer casing) can be removed without disassembling suc / dis piping and driver
- Axial thrust balancing is with the help of options like piston & balance disc, double piston or straight piston to suit various applications
- Low NPSH requirement is achieved with first stage double suction impeller in DCD pumps
- Pump family designed to have maximum parts interchangeability

Operating Range

Capacity	Up to 650 m^3/hr
Head	Up to 2500 m
Working pressure	Up to 17 bar
Temperature	(-) 104 - 425°C
Nozzle orientation	Top-Top & Side-Top
Flange rating	Cl. 300/600/ 900/1500/2500

Brief References of Supplies to Sugar Industries

OEM's

ISGEC Heavy Engg Co.Ltd
S.S.Engineeers
Walchandnagar Industries Limited
Thyssenkrupp Industries India Ltd
S.S.Techno Ltd
Meru Industries
Spray Engineering
Uttam Sucrotech
Sitson India Pvt Ltd
National Heavy Engg Co.Ltd
Fives Cail KCP Ltd
VRL Automation Engg & Projects Pvt Ltd
Shrijee Processs Engg Works Ltd
Lunar Engineers
Saisidha Sugar
ICT -Dharwad

Consultants in India

Avant Garde Engineers & Consultants Pvt. Ltd.
J.P.Mukharjee & Associates
Vasandada Sugar Institue(VSI)
Deccan Sugar Technologist Association
Mitcon
J.T.Jadhav & Associates
National Sugar Institue-Kanpur

Selective End users in India

Warna SSK
Sahyadri SSK
Athani Group of Sugars Industries
Vitthal refined sugars Ltd
Pandurang SSK
Siddheshwar SSK
Sonhira SSK
Sharayu Agro
Malegaon SSK
Shri Chhatrapati SSK
Andhra Sugars Ltd
Bajaj Hindustan
Balrampur Chini Mills Ltd
Bannari Ammans Sugar Ltd
Birla Group of Sugar Companies
Dalmia Sugars Ltd
DSCL Sugar Mills Ltd
Dhampur Sugar Mills Ltd
EID Parry Group
Gems Sugar Ltd
Kothari Sugars Ltd
Parle Sugar Mills Ltd
Shakti Sugars Ltd
Krishna SSK Niyamit
Nandi SSK Niyamit
Prabhulingheshwar Sugars Ltd
Renuka group of sugar Industries
Triveni Sugar Ltd

Selective Global Supply References in Sugar Industries

Tendaho Sugar Factory-Ethiopia
East Africa Sugar Factory Ltd-Kenya
Finchaa Sugar-Ethiopia
Guyana sugar corporation-Guyana
Kagera Sugar Ltd-Tanzania
Kakira Sugar Works Ltd-Uganda
Kinyara sugar limited -Uganda
Metehara Sugar Factory -Ethiopia
Miwani sugar company ltd-Kenya
Sevanagala sugar industries ltd-Srilanka
Societe des Sucreries et de Distilleries d' -Egypt
South Nyanza sugar company-Kenya
Birganj Sugar Factory Ltd- Nepal
Sugar Corp.of Uganda Ltd-Uganda
Tropicana Sugar Estate -Jamaica
Everest Sugar & Paper Mill Ltd- Nepal

Basic Guidelines for Pump Performance

Total Head Calculation Methods

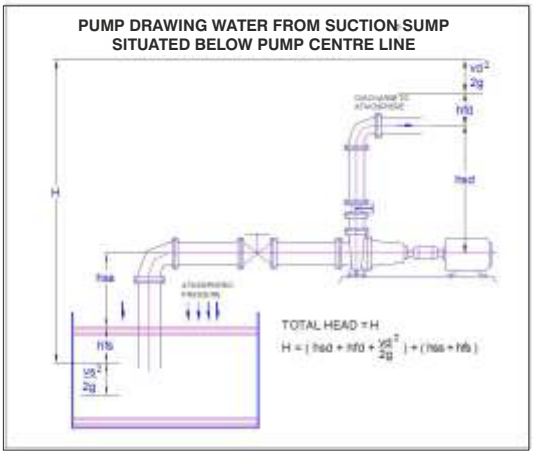

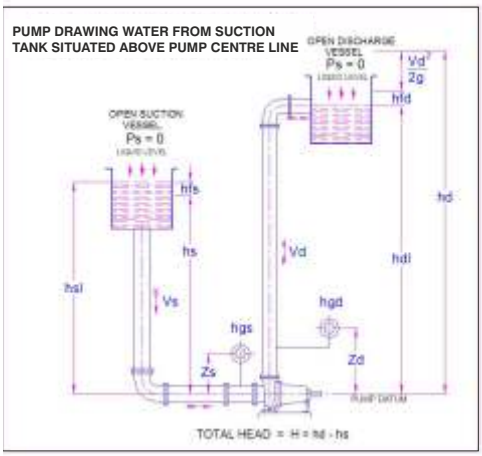

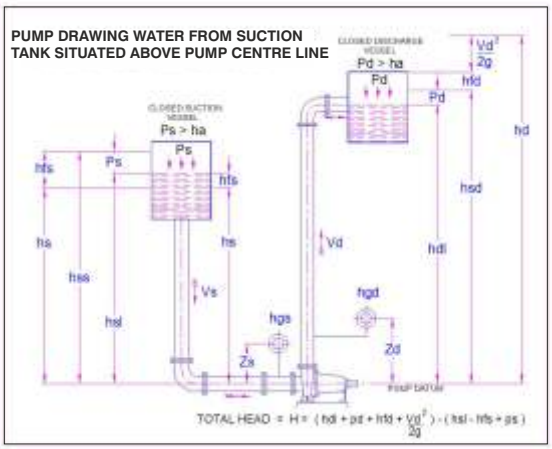

Pump Performance Vs Impeller Diameter

- The performance of a centrifugal pump can be varied by changing the impeller diameter.
- Common rules of affinity apply between the diameter and flow, head and power:

$Q \propto D$ Q = flow
$H \propto D^2$ H = head
$P \propto D^3$ P = absorbed power
D = impeller dia. in mm.

Changes in Impeller Diameter

$$\frac{Q_2}{Q_1} = \frac{D_2}{D_1} \quad \text{therefore} \quad Q_2 = Q_1 \times \left(\frac{D_2}{D_1}\right)$$

$$\frac{H_2}{H_1} = \left(\frac{D_2}{D_1}\right)^2 \quad \text{therefore} \quad H_2 = H_1 \times \left(\frac{D_2}{D_1}\right)^2$$

$$\frac{P_2}{P_1} = \left(\frac{D_2}{D_1}\right)^3 \quad \text{therefore} \quad P_2 = P_1 \times \left(\frac{D_2}{D_1}\right)^3$$

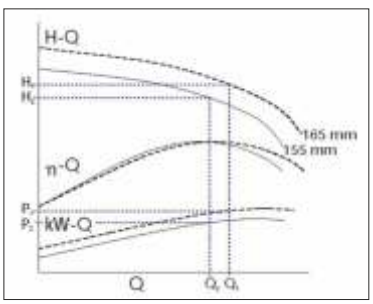

Pump Performance Vs Speed

- The performance of a centrifugal pump can be varied by changing the speed.
- Common rules of affinity apply between the speed and flow, head and power:

$Q \propto N$ Q = flow
$H \propto N^2$ H = head
$P \propto N^3$ P = absorbed power
N = speed rpm

Changes in Pump Speed

$$\frac{Q_2}{Q_1} = \frac{N_2}{N_1} \quad \text{therefore} \quad Q_2 = Q_1 \times \left(\frac{N_2}{N_1}\right)$$

$$\frac{H_2}{H_1} = \left(\frac{N_2}{N_1}\right)^2 \quad \text{therefore} \quad H_2 = H_1 \times \left(\frac{N_2}{N_1}\right)^2$$

$$\frac{P_2}{P_1} = \left(\frac{N_2}{N_1}\right)^3 \quad \text{therefore} \quad P_2 = P_1 \times \left(\frac{N_2}{N_1}\right)^3$$

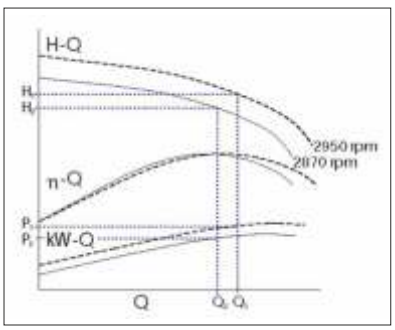

NPSH calculation for various piping layouts

NPSHA CALCULATIONS

1) CASE No. 1 : PUMP DRAWING LIQUID FROM A SUMP OPEN TO ATMOSPHERE

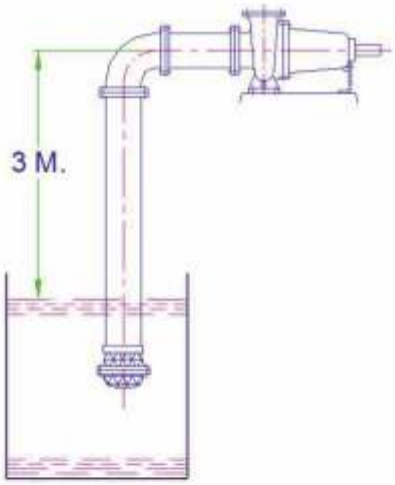

DATA :

a) SUCTION LIFT = 3 meters

b) FRICTION LOSSES IN SUCTION PIPE LINE, FOOT VALVE, STRAINER } = 1 meter

c) TEMPERATURE OF WATER = 21° C

d) VAPOUR PRESSURE = 0.25 meters

e) ATMOSPHERIC PRESSURE = 10.00 meters

TOTAL SUCTION LIFT = hs = hss - hfs
= - 3 - 1
= - 4 meters

NPSHA = ha ± hs - hvp
= 10 - 4 - 0.25
= 5.75 meters

NPSHA CALCULATIONS

1) CASE No. 2 : PUMP DRAWING WATER FROM TANK, LOCATED ABOVE PUMP CENTRE AND OPEN TO ATMOSPHERE.

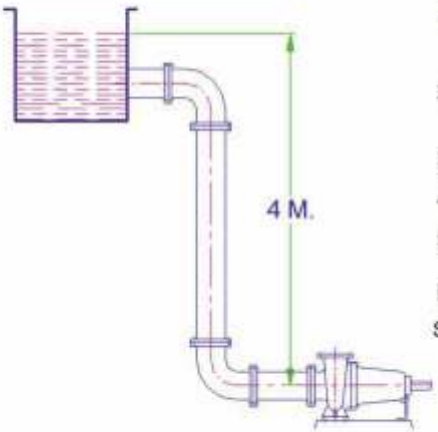

DATA :

1) HEIGHT OF WATER LEVEL IN SUCTION TANK, ABOVE THE CENTRELINE OF THE PUMP = 4 meters

2) FRICTION LOSSES IN SUCTION PIPE SYSTEM (PIPE LINE VALVE & FITTINGS) = 1.2 meters

3) TEMPERATURE OF LIQUID : = 21° C

4) VAPOUR PRESSURE OF THE LIQUID : = 0.25 meters

5) ATMOSPHERIC PRESSURE : = 9.00 meters

METHOD :

SUCTION HEAD, hs = hss - hfs
= + 4 - 1.2 meters
= 2.8 meters OF WATER (SUCTION HEAD)

NPSHA = ha ± hs - hvp
= 9.00 + 2.8 - 0.25
= 11.55 meters

Basic Guidelines for Pump Performance

NPSHA CALCULATIONS

1) CASE No. 3 : PUMP DRAWING WATER FROM A CLOSED VESSEL UNDER VACUUM

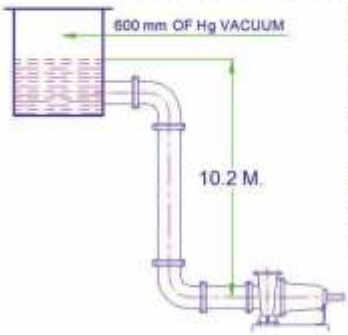

DATA :

1) VACUUM IN VESSEL	=	600 mm of mercury
2) LIQUID TEMPERATURE	=	40° C
3) LIQUID LEVEL ABOVE PUMP CENTRE	=	10.2 meters
4) FRICTION LOSSES IN SUCTION PIPE ILINE SYSTEM	=	1 meter
5) VAPOUR PRESSURE	=	0.49 kg / cm^2
6) SP. GRAVITY OF LIQUID	=	0.72

METHOD :

$$ha = \frac{10 \times 1}{0.72} = 13.89 \text{ meters of liquid}$$

$$hvp = \frac{10 \times 0.49}{0.72} = 6.81 \text{ meters of liquid}$$

$$Ps = 600 \text{ mm of Hg}$$

$$= \frac{600}{1000} \times \frac{13.6}{0.72} = 11.33 \text{ meters of liquid}$$

(∵ 13.6 is specifie gravity of mercury)

$$hs = hsl - Ps - hfs$$
$$= 10.2 - 11.33 - 1$$
$$= -2.13 \text{ meters of liquid (suction lift exists)}$$

$$NPSHA = ha \pm hs - hvp = 13.89 - 2.13 - 6.81 = 4.95 \text{ meters}$$

NPSHA CALCULATIONS

1) CASE No. 4 : PUMP DRAWING LIQUID UNDER PRESSURE FROM A CLOSED TANK.

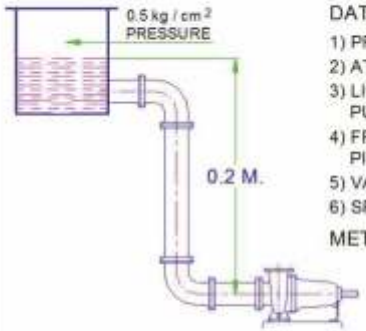

DATA :

1) PRESSURE IN CLOSED VESSEL	=	0.5 kg / cm^2
2) ATMOSPHERIC PRESSURE AT INSTALLATION	=	0.9 kg / cm^2
3) LIQUID LEVEL IN A VESSEL ABOVE THE PUMP CENTRE LINE	=	0.2 meters
4) FRICTION LOSSES IN SUCTION PIPE LINE SYSTEM	=	1.5 meters
5) VAPOUR PRESSURE OF LIQUID	=	0.45 kg / cm^2
6) SP. GRAVITY OF LIQUID	=	0.8

METHOD :

$$ha = \frac{10 \times 0.9}{0.8} = 11.25 \text{ meters of liquid}$$

$$hvp = \frac{10 \times 0.45}{0.8} = 5.625 \text{ meters of liquid}$$

$$Ps = \frac{10 \times 0.5}{0.8} = 6.25 \text{ meters of liquid}$$

NOW

$$hs = hsl + Ps - hfs$$
$$= 0.2 + 6.25 - 1.5$$
$$= 4.95 \text{ meters of liquid (suction head exists)}$$

$$NPSHA = ha \pm hs - hvp$$
$$= 11.25 + 4.95 - 5.625$$
$$= 10.575 \text{ meters}$$

SYSTEM HEAD CURVE

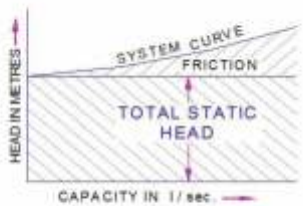

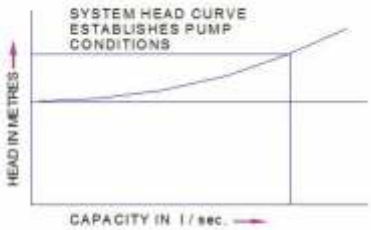

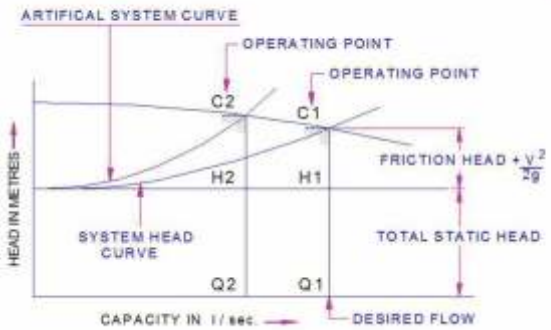

Mail your queries to
marketing@kbl.co.in or contact us at +91(20)27214444

Pumps | Valves | Hydro Turbines | Turnkey Projects

KIRLOSKAR BROTHERS LIMITED
A Kirloskar Group Company
Established 1888

OUR COMPANIES

United Kingdom | U.S.A. | South Africa | India | The Netherlands

Registered Office: Udyog Bhavan, Tilak Road, Pune - 411002. Tel: +91(20)24440770, Corporate Office: "Yamuna", Survey No. 98/3 to 7, Baner, Pune - 411045. Tel: +91(20)27214444, Email: marketing@kbl.co.in, Website: www.kirloskarpumps.com, CIN No.: L29113PN1920PLC000670